SUBARU

INSTALLATION INSTRUCTIONS

PART NUMBER: H501SXA201, H501SAG100

DESCRIPTION: ELECTROCHROMIC MIRROR with Compass and HomeLink®

A KIT CONTENTS:

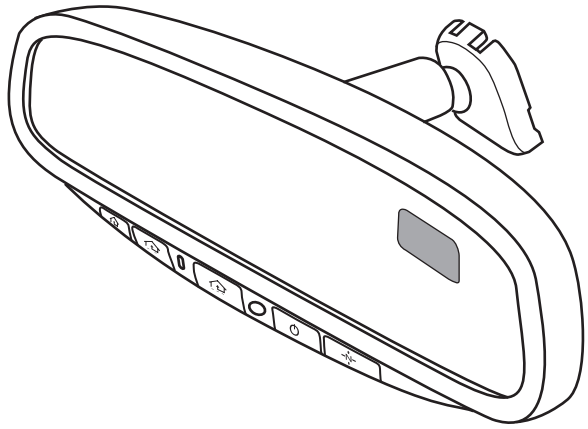

1X

B

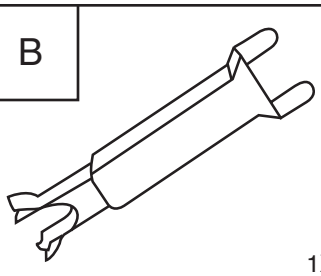

1X

D

1X

C

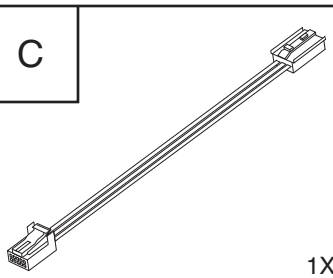

1X

E

B9 TRIBECA ONLY

FOAM TAPE

1X

F ADDITIONAL REQUIREMENTS: (FORESTER AND IMPREZA ONLY)

PT# H501SSA040

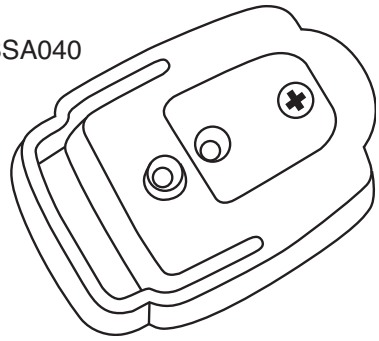

1X

G

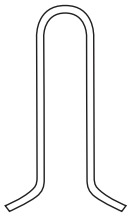

H

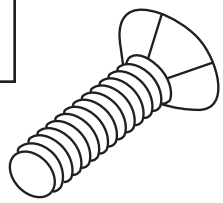

2X

I

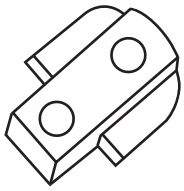

1X

J

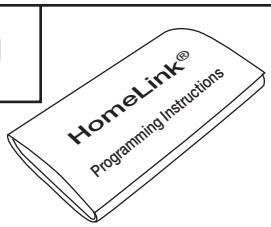

1X

TOOLS REQUIRED:

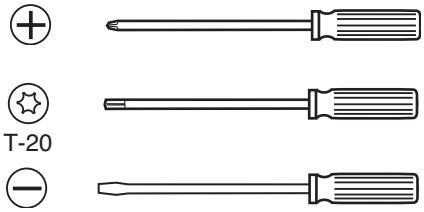

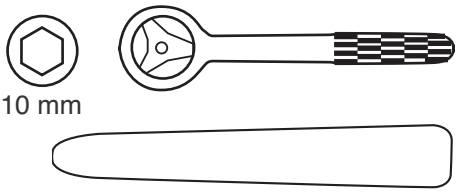

MEANING OF CHARACTERS:

- : Remove
- : Connect
- : Loosen
- : Install
- : Location of Clip or Screw
- : Discard
- : Disconnect
- T : Tightening Torque
- : Reuse

PART NUMBERS	ISSUE	DATE		PAGE
H501SXA201, H501SAG100	F	2007/11/07	SUBARU OF AMERICA	1/5

HomeLink® and the HomeLink® house are registered trademarks of Johnson Controls, Inc.

Supplier Reference Number: 550-328F

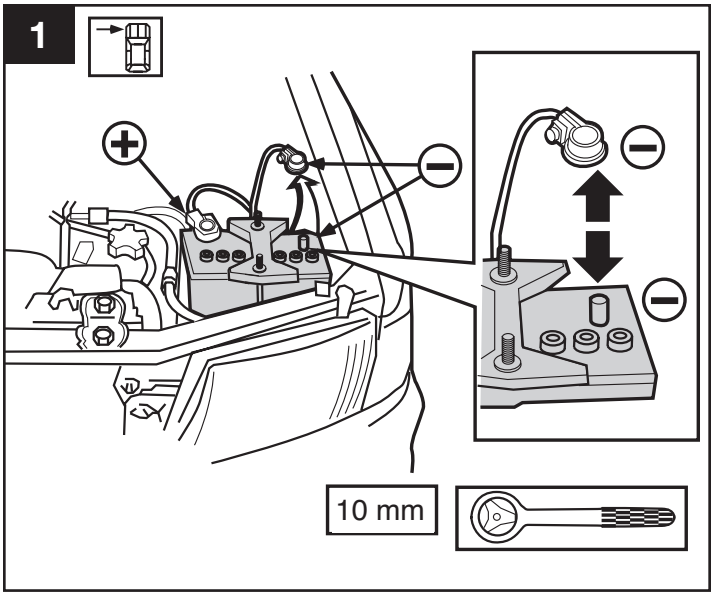

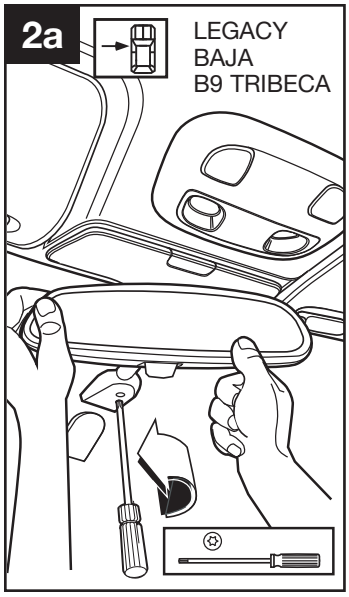

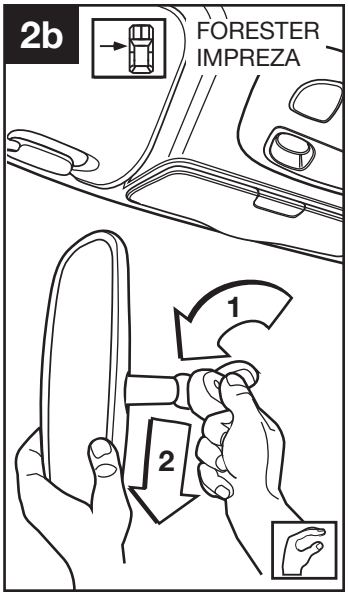

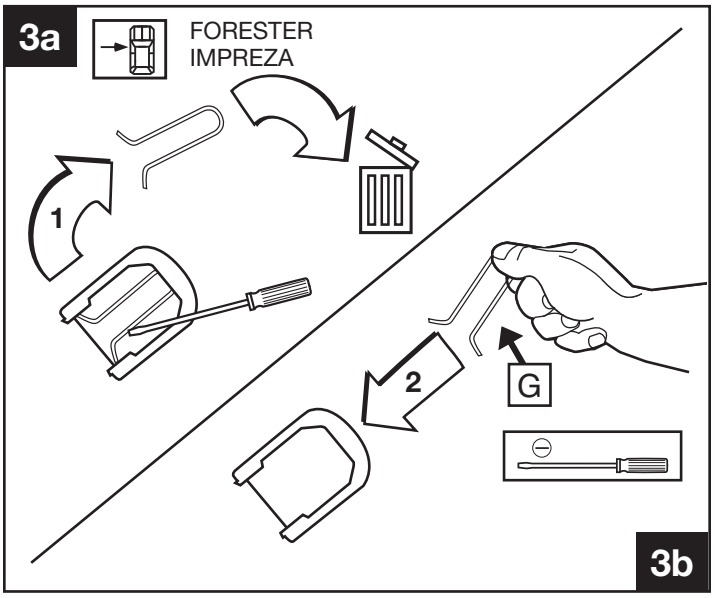

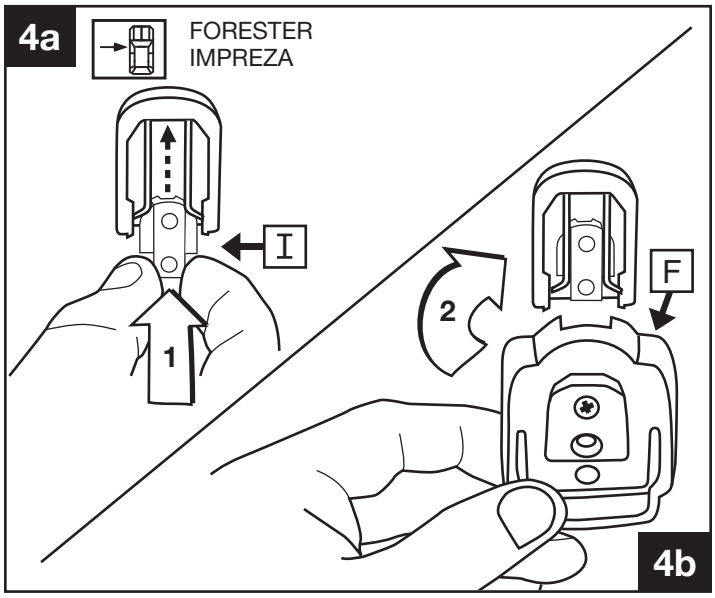

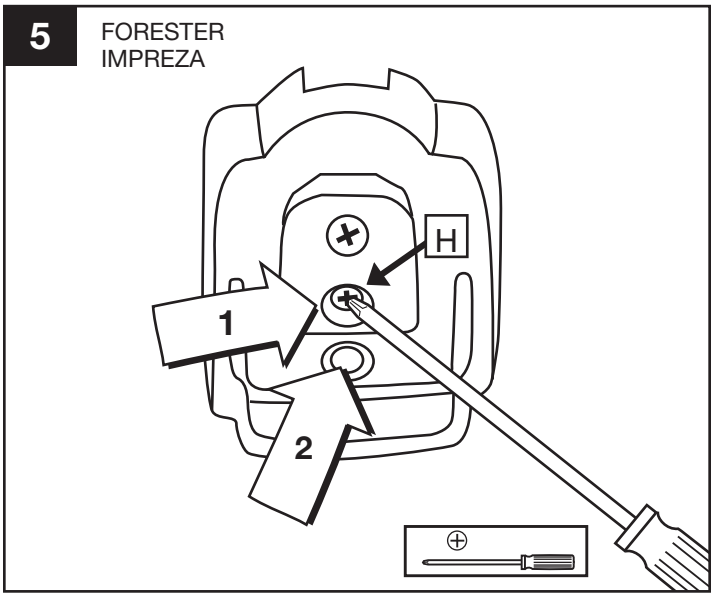

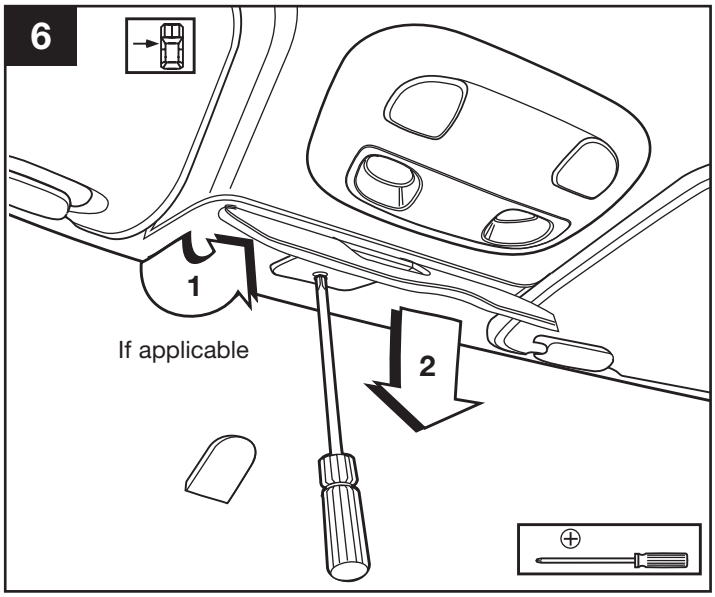

PART NUMBERS	ISSUE	DATE	SUBARU OF AMERICA	PAGE
H501SXA201, H501SAG100	F	2007/11/07		2/5

Supplier Reference Number: 550-328F

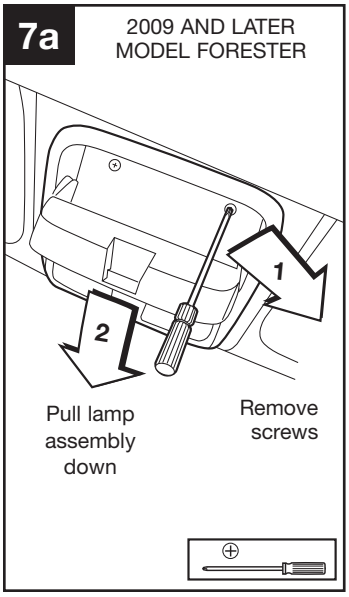

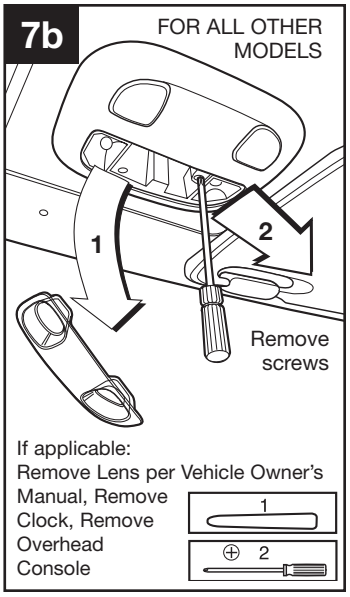

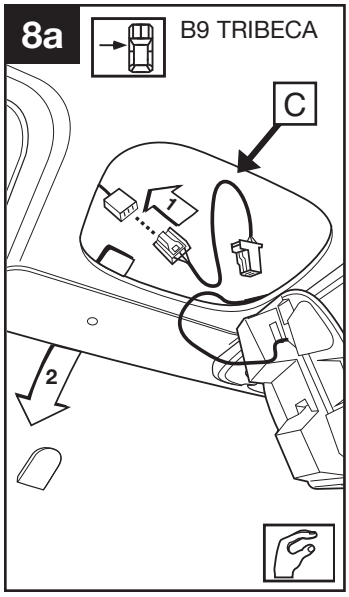

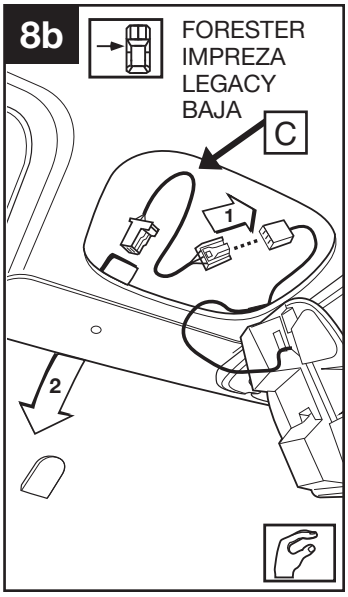

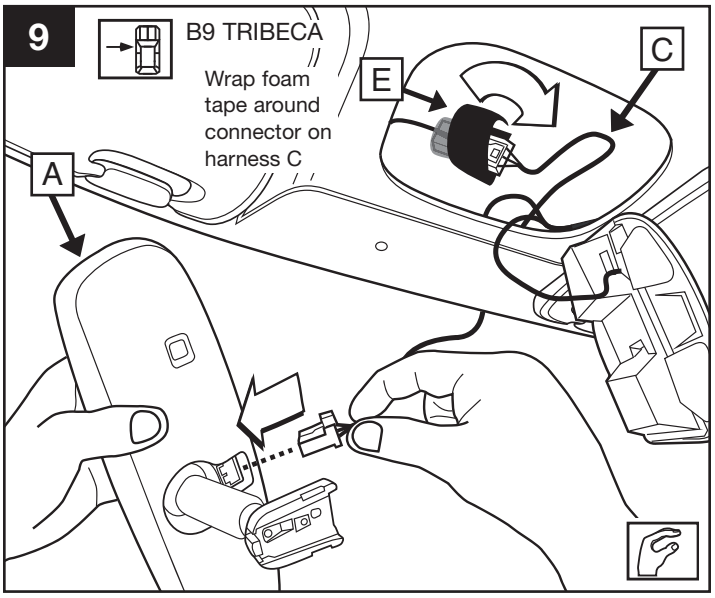

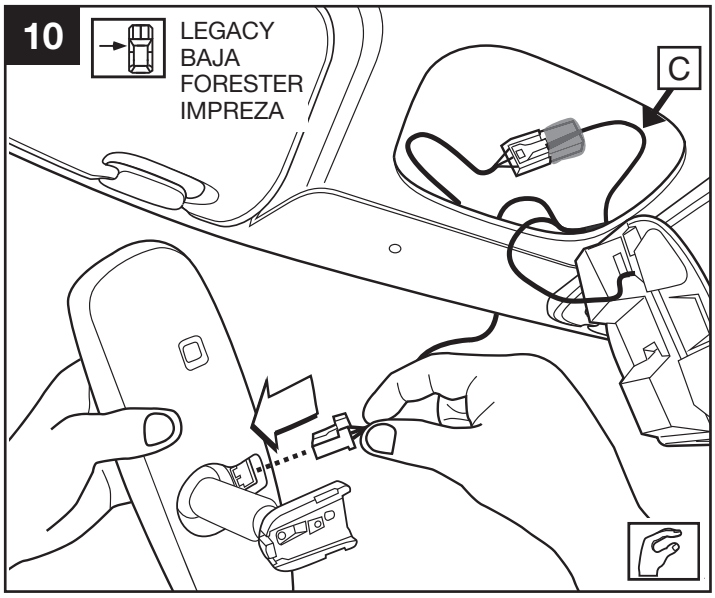

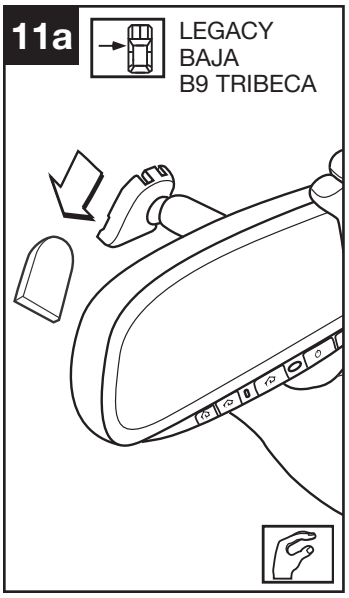

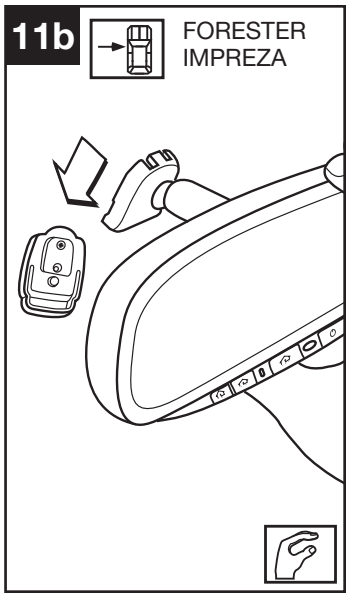

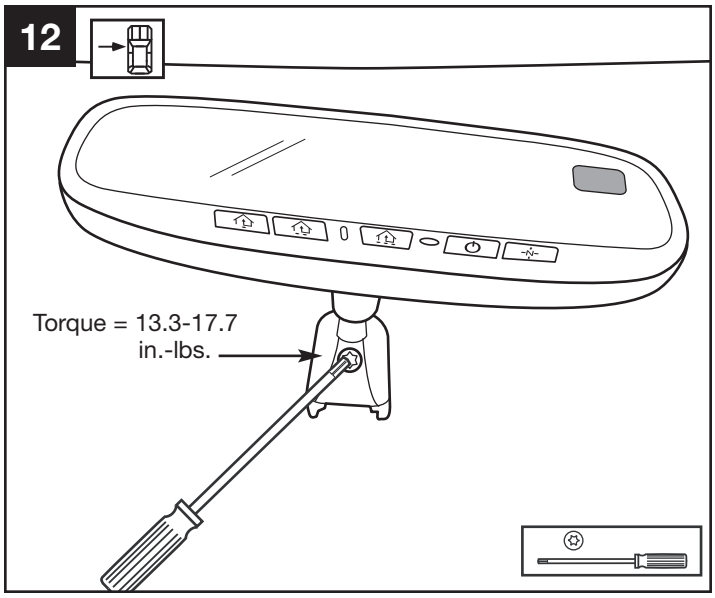

PART NUMBERS	ISSUE	DATE	SUBARU OF AMERICA	PAGE
H501SXA201, H501SAG100	F	2007/11/07		3/5

Supplier Reference Number: 550-328F

13

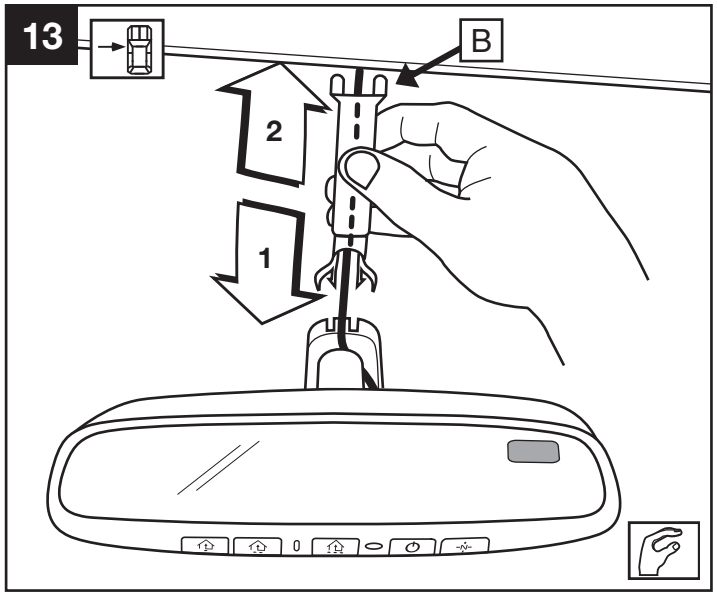

14

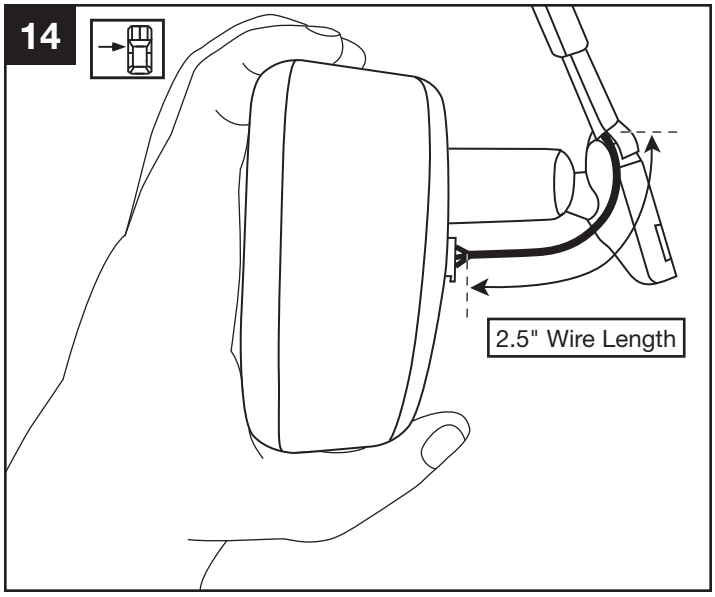

15

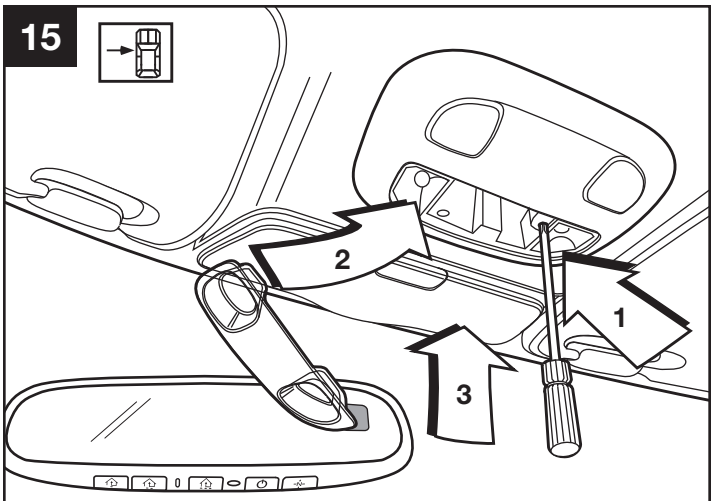

1. If applicable:
   Re-install center visor.

16

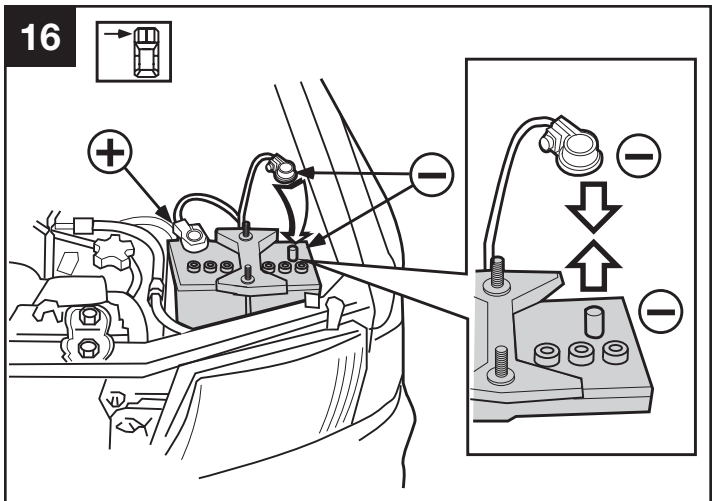

17

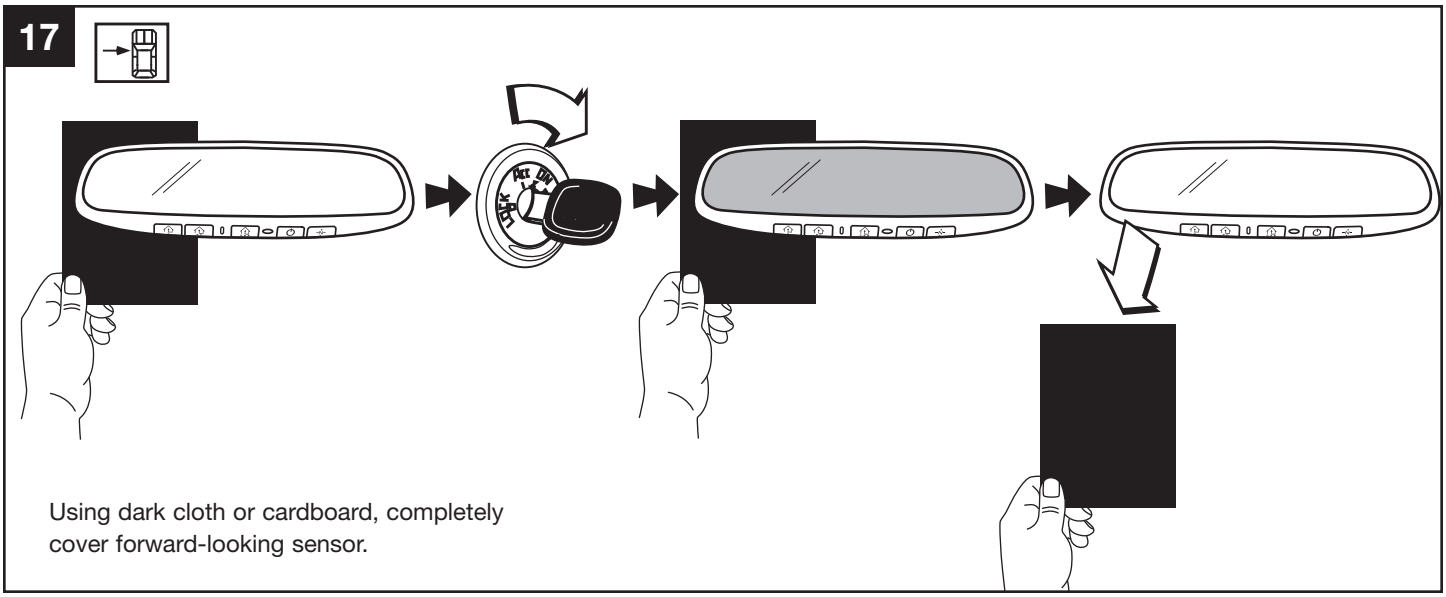

Using dark cloth or cardboard, completely cover forward-looking sensor.

PART NUMBERS	ISSUE	DATE	SUBARU OF AMERICA	PAGE
H501SXA201, H501SAG100	F	2007/11/07		4/5

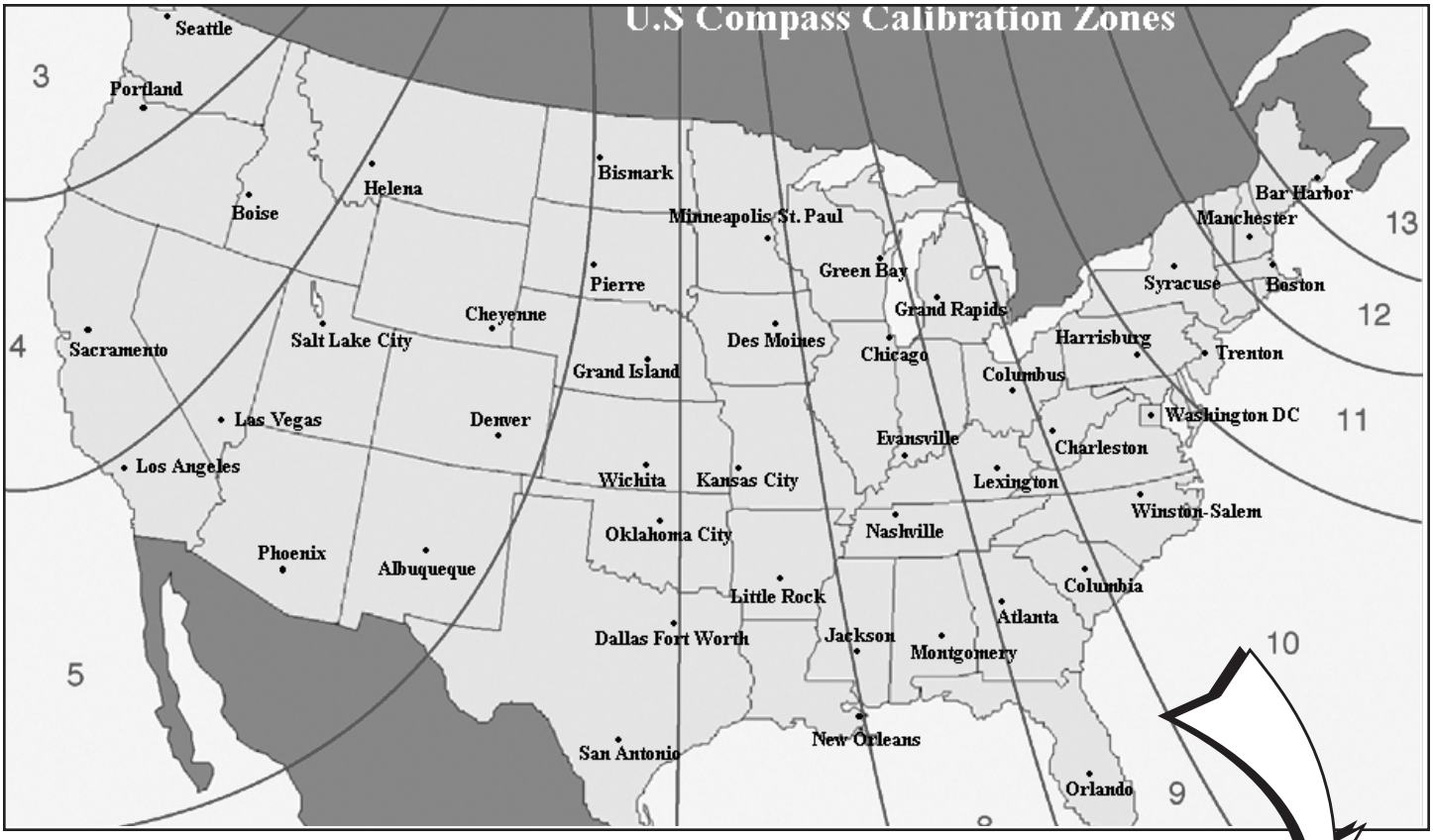

18

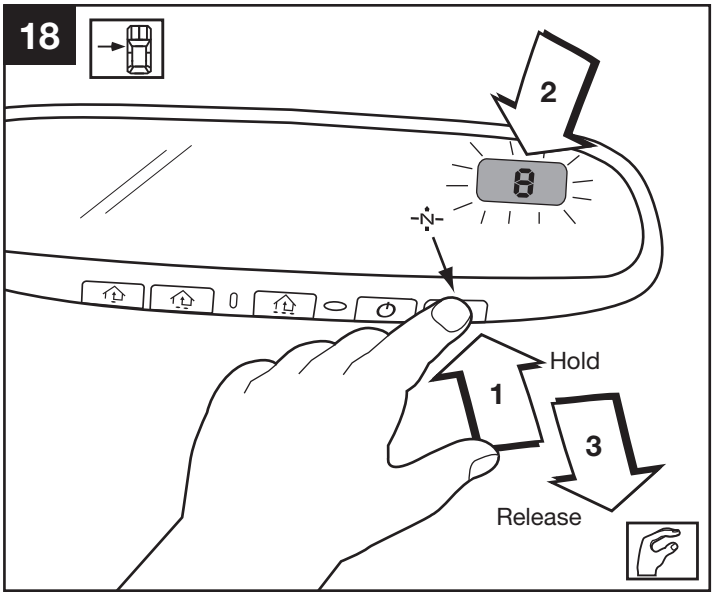

19

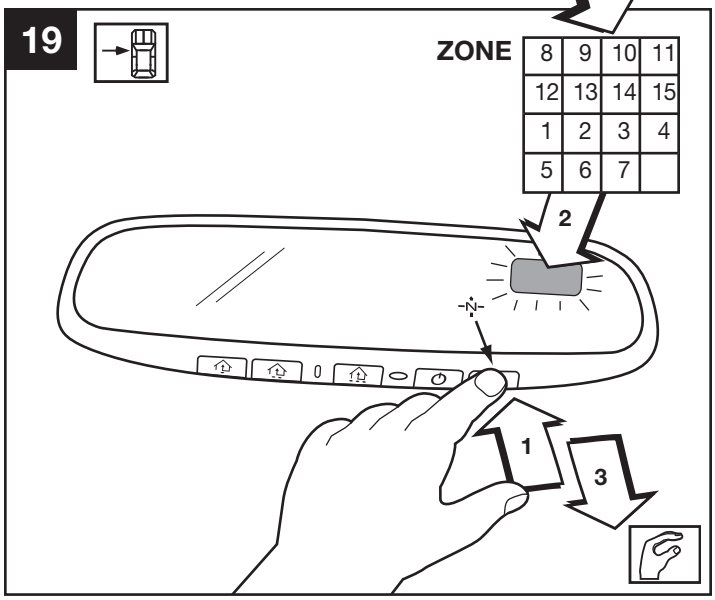

20

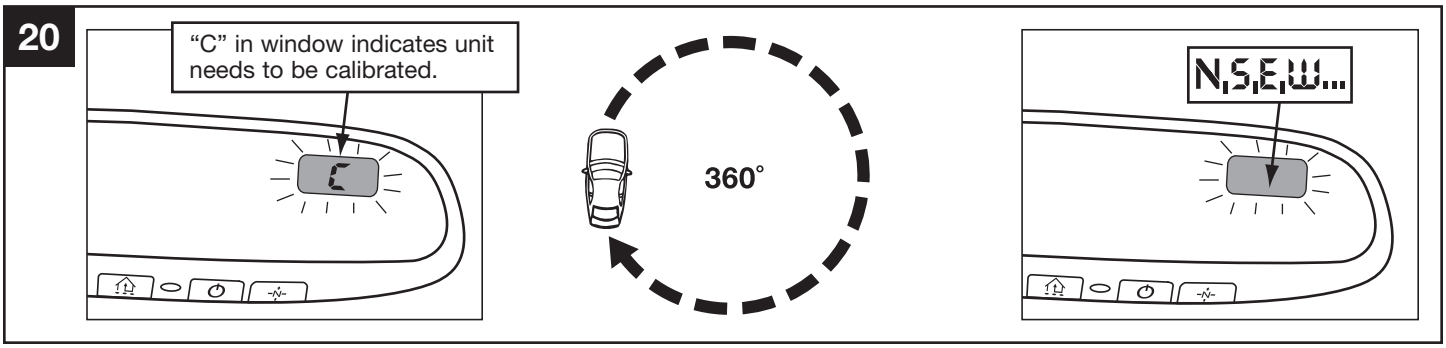

PART NUMBERS	ISSUE	DATE	SUBARU OF AMERICA	PAGE
H501SXA201, H501SAG100	F	2007/11/07		5/5

Supplier Reference Number: 550-328F